Off-Plane X-ray Grating Spectrometer Camera for IXO

Neil J. Murray[1], Andrew D. Holland[1], Richard D. Harriss[1], James H. Tutt[1], Simeon J. Barber[1], Peter Pool[2], James Endicott[2], David Burt[2], Dave Walton[3], Mat Page[3], Randall L. McEntaffer[4], Ted Schultz[4], Webster C. Cash[5], Chuck Lillie[6], Suzanne Casement[6]

[1]Planetary and Space Sciences Research Institute, Open University, Milton Keynes, MK7 6AA, UK
[2]e2v technologies plc, 106 Waterhouse Lane, Chelmsford, CM1 2QU, UK
[3]Mullard Space Science Laboratory, Holmbury St. Mary, Dorking, Surrey, RH5 6NT, UK.
[4]University of Iowa, [5]University of Colorado, [6]Northrop Grumman Space Technology

ABSTRACT

The International X-ray Observatory (IXO) is a merger of the former ESA XEUS and NASA Constellation-X missions, with additional collaboration from JAXA, proposed for launch ~2020. IXO will address the leading astrophysical questions in the 'hot universe' through its breakthrough capabilities in X-ray spectroscopy. The mission covers the 0.1 to 40 keV energy range, complementing the capabilities of the next generation observatories, such as ALMA, LSST, JWST and 30 meter ground-based telescopes. An X-ray Grating Spectrometer is baselined to provide science in the energy range 0.3-1.0 keV at a spectral resolution of $E/\Delta E > 3{,}000$ with an effective area greater than 1,000 cm^2. This will require an array of soft X-ray enhanced CCDs operating at a modest frame rate to measure the diffracted light in both position and energy. Here we describe the baseline camera for the Off-plane XGS instrument using mature CCD technology.

Keywords: CCD, IXO, OPXGS, X-ray spectroscopy, soft X-ray, light blocking filter

1. OFF-PLANE X-RAY GRATING SPECTROMETER

OPXGS shall have spectral resolution $E/\Delta E = 3{,}000$ with an effective area (A_{eff}) of 1,000 cm^2 over the entire energy band 0.3-1.0 keV. OPXGS comprises a grating system to disperse a portion of the telescope beam and a camera system to detect and process the incident X-rays. OPXGS consists of an array of reflection gratings in the off-plane mount that diffracts light onto an array of dedicated imaging detectors[1]. Light intersects the surface of the grating at grazing incidence, ~2.5°, and nearly parallel to the groove direction, maximizing the illumination efficiency on the gratings. Furthermore, the groove profile is blazed to preferentially diffract light to only one side of zero order thus increasing the efficiency of light collected into a single detector array, reducing the total mass of the instrument.

The effective telescope PSF can be minimized by only sampling a fraction of the beam - limiting the azimuthal coverage of the grating array, or in other words sub-aperturing. This will decrease the width of the spectral lines in the dispersion direction thus increasing spectral resolution. Therefore, the optical quality of the gratings is approximately that of the telescope optics and is relaxed by an additional factor equal to the sub-aperture factor.

An off-plane grating array can in principle achieve the instrument performance requirements at any position along the optical axis from just aft of the optics to just a few meters away from the focal plane, due to the converging beam. Taking into account the design of the IXO spacecraft, this gives three practical solutions for mounting the grating array and is shown in Figure 1.

*n.j.murray@open.ac.uk; tel: +44 (0)1908 332769; fax: +44 (0)1908 655910; http://www.open.ac.uk./cei

High Energy, Optical, and Infrared Detectors for Astronomy IV, edited by Andrew D. Holland, David A. Dorn
Proc. of SPIE Vol. 7742, 77420X · © 2010 SPIE · CCC code: 0277-786X/10/$18 · doi: 10.1117/12.864051

Downloaded from SPIE Digital Library on 09 Aug 2010 to 128.183.56.12. Terms of Use: http://spiedl.org/terms

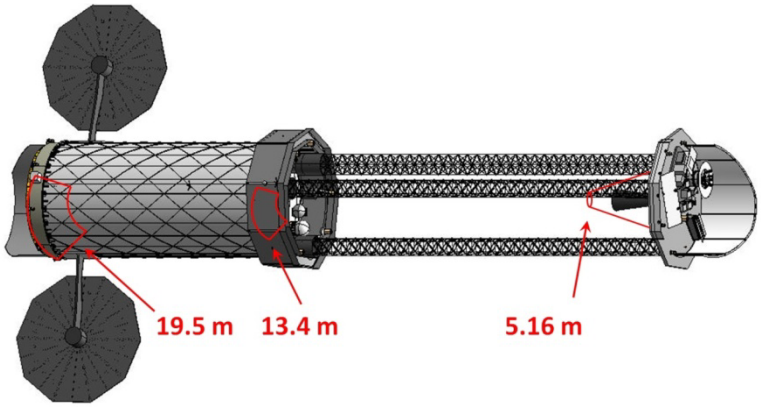

Figure 1: Schematic showing the three basic grating locations. Note that the distances shown are indicative only.

The first position accommodates the gratings just aft of the Flight Mirror Assembly and is the so-called "19.5 m" option, reflecting the distance between the grating and its focal plane. However this location requires the largest collecting area of gratings and hence the largest mass. Secondly, grating arrays are mounted at the spacecraft's avionics bus which gives a 13.4 m seperation between grating and focal plane. This provides a modest total instrument mass whilst easily meeting the mission requirement but introduces a requirement for three-body alignment. Finally, gratings are located closer to the fixed instrument platform on an additional mechanical standoff that can also provide support structure for a common stray light baffle and energetic particle deflectors. In this case a "tower" concept is invoked; after detailed study the grating arrays can be located at ~5.16 m from the focal plane, meeting mission requirements with an additional 20% margin for resolution. Therefore it was agreed to baseline the tower solution for the OPXGS design.

2. RAYTRACE & DETECTOR LAYOUT

Six grating modules disperse light into the six separate arcs and zero order locations as shown in Figure 2. Fourteen spectral CCDs (1-14) will be used collect light in 2nd through 5th order (61 Å to 92 Å) to meet resolution requirements or, depending on tighter pointing tolerance and knowledge of image blur effects, the array can be reduced in size to the innermost twelve CCDs and collect light in 1st through 3rd order (36 Å to 72 Å). Four extra CCDs will monitor the zero order reflections from the gratings to provide wavelength calibration and are labeled 15-18 in Figure 2.

Both pairs of three arcs of dispersion are separated by 2 mm allowing each to be easily spatially resolved from one another. Each arc, aside from the upper-most ones in CCDs 2 and 3, fall no closer than 3 mm from the boundaries of the detectors in the array. Due to the high effective area of the instrument at these wavelengths and the spectral redundancy of utilizing six arcs of dispersion, any potential losses through telescope jitter at these locations will still yield performance above 1,000 cm^2.

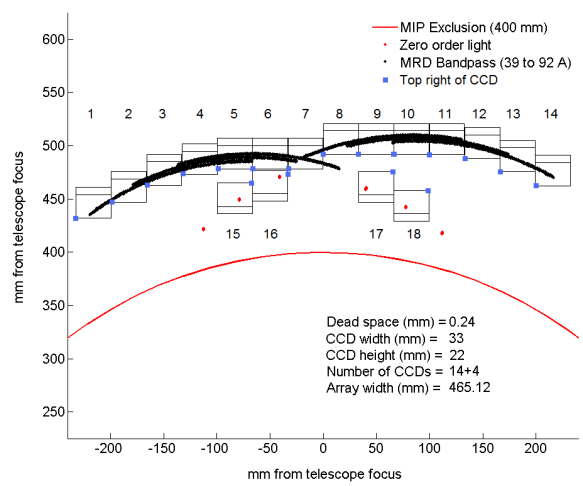

Figure 2: Instrument raytrace and CCD detector window layout

Downloaded from SPIE Digital Library on 09 Aug 2010 to 128.183.56.12. Terms of Use: http://spiedl.org/terms

3. CAMERA BOX & ACCOMODATION

A single OPXGS camera box is mounted on the Fixed Instrument Platform (FIP) and captures the dispersed spectra from the grating modules and four of the six zero order reflections for wavelength calibration. The position of the camera relative to the main focus of the telescope is shown in Figure 3. The camera box has been designed to ensure adequate clearance from the X-Ray Microcalorimeter Spectrometer (XMS) instrument located on the Movable Instrument Platform (MIP).

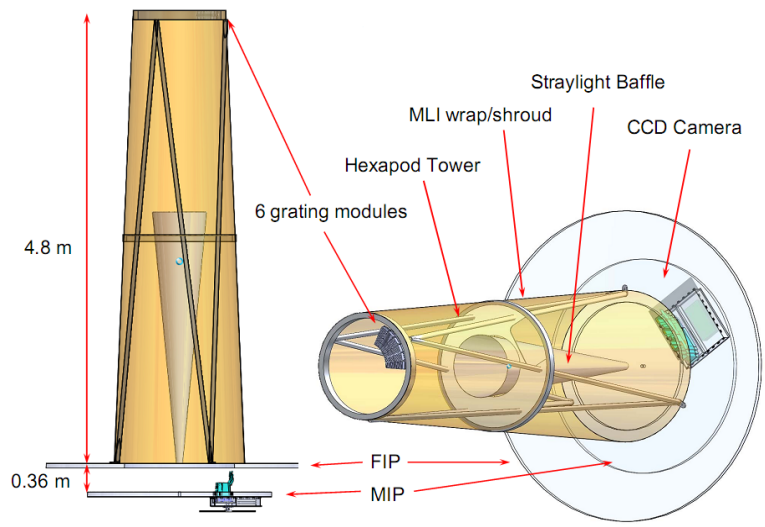

Figure 3: Location of the camera on the Fixed Instrument Platform.

The camera box comprises three parts, accommodated in two hermetically sealed compartments. Firstly, the main chamber, shown right in Figure 4, houses a passively cooled detector array of 18 identical CCDs that interface via a cold bench to an external radiator. A stray light baffle, shown in Figure 5, extends from the camera box towards the grating modules whose aperture is terminated by a door (not shown) that remains closed for contamination control until the spacecraft has sufficiently out-gassed in orbit. The chamber shown to the left of Figure 4 houses both the complete camera electronics (drive, readout and data processing) and electronics for thermal control of the gratings, tower and CCD cold bench.

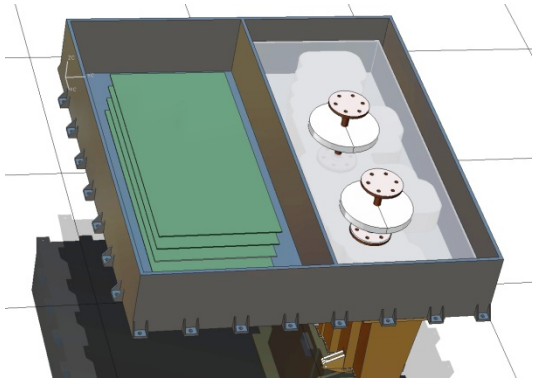

Figure 4: The camera box. Left, the warm electronics. Right, the CCD cold bench.

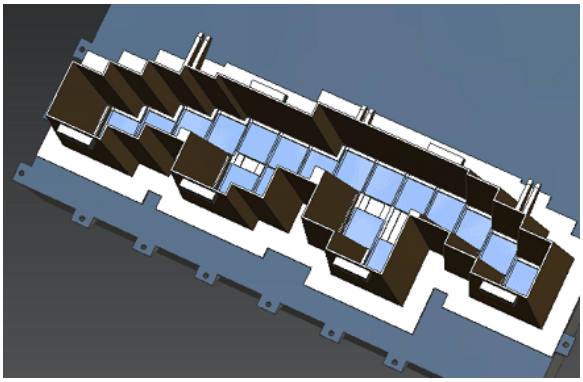

Figure 5: Stray light baffle.

Downloaded from SPIE Digital Library on 09 Aug 2010 to 128.183.56.12. Terms of Use: http://spiedl.org/terms

The camera head comprises an array of CCDs mounted onto an optical bench, with associated thermal, mechanical and shielding assemblies. Additionally, the bench affords radiation shielding of the CCDs. The bench has an equilibrium (non-operational) temperature of approx -100 °C, achieved through thermal coupling to a radiator and is heated to and controlled at its operational temperature of -80 °C by resistive heaters (and associated sensors) coupled to the bench. A diagram of the camera box concept is shown in Figure 6.

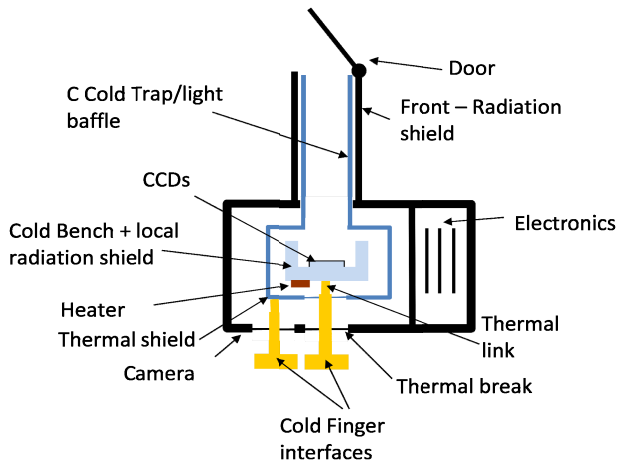

Figure 6: Schematic of the camera box.

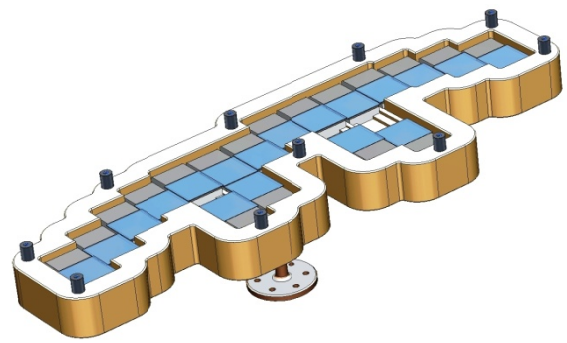

Figure 7: Radiation shielding surrounding the CCD array.

The bench is surrounded by a thermal shield cooled by a second radiator to -50 °C which acts to improve the thermal efficiency of cooling the CCD bench. The shield is thermally coupled to a cold trap, which takes the form of a thin (ca. 2 mm) aluminium lining, following the form of, but thermally decoupled from, the front radiation shield. This front radiation shield offers radiation protection to the CCD by presenting ca. 20 mm of aluminium shield from incoming radiation, shown in Figure 7.

Analysis to provide an initial estimate of the thermal considerations for the IXO OPXGS camera has been carried out. A simple first order estimate of the major heat sources into the camera was conducted using primarily Stefan's Law and conductive heating through a thermal resistance (primarily the mechanical fixings and electrical connectors)[2]. The camera was considered as two separate systems; those being the CCD cold bench-light baffle array sat at -100 °C and the thermal shield-cold trap that sits at -50 °C. Due to the fact this study was a first order estimate of the major heat sources most of the analysis was conducted using simple models and assumptions. The general premise of all the calculations was to take the proposed operating conditions for the camera array and then using the design specifications calculate what the radiator and thermal coupling parameters need to be for the camera to equilibrate to the defined temperatures.

In order to cool the camera sub systems to their required operating temperatures it was recommended that two radiators are used; one for each of the two different temperatures required in the camera. The analysis points towards the requirement for the first radiator operating at -52 °C and being able to dissipate 13.8 W in order to maintain the cold trap and thermal shield at -50 °C. The second radiator will need to operate at -102 °C whilst being able to dissipate 14.0 W in order to maintain the cold bench to -100 °C.

To raise the temperature of the array to the required operating range (-80 °C) it was also calculated that a 30.0 W heater is required, possibly in a configuration of two 15.0 W heaters, so that the required 12.4 W of heat can be supplied to achieve the specified temperature.

Downloaded from SPIE Digital Library on 09 Aug 2010 to 128.183.56.12. Terms of Use: http://spiedl.org/terms

4. DRIVE & READOUT ELECTRONICS

The electrical block diagram of the XGS camera system is shown in Figure 8. It consists of the focal plane camera and analogue and digital circuitry. To save mass and minimize harnessing, the analogue and digital electronics are housed in the same box as the CCDs, shown in Figure 4, in a hermetically isolated compartment to eliminate the possibility of contamination of the CCDs from outgassing of the electronics.

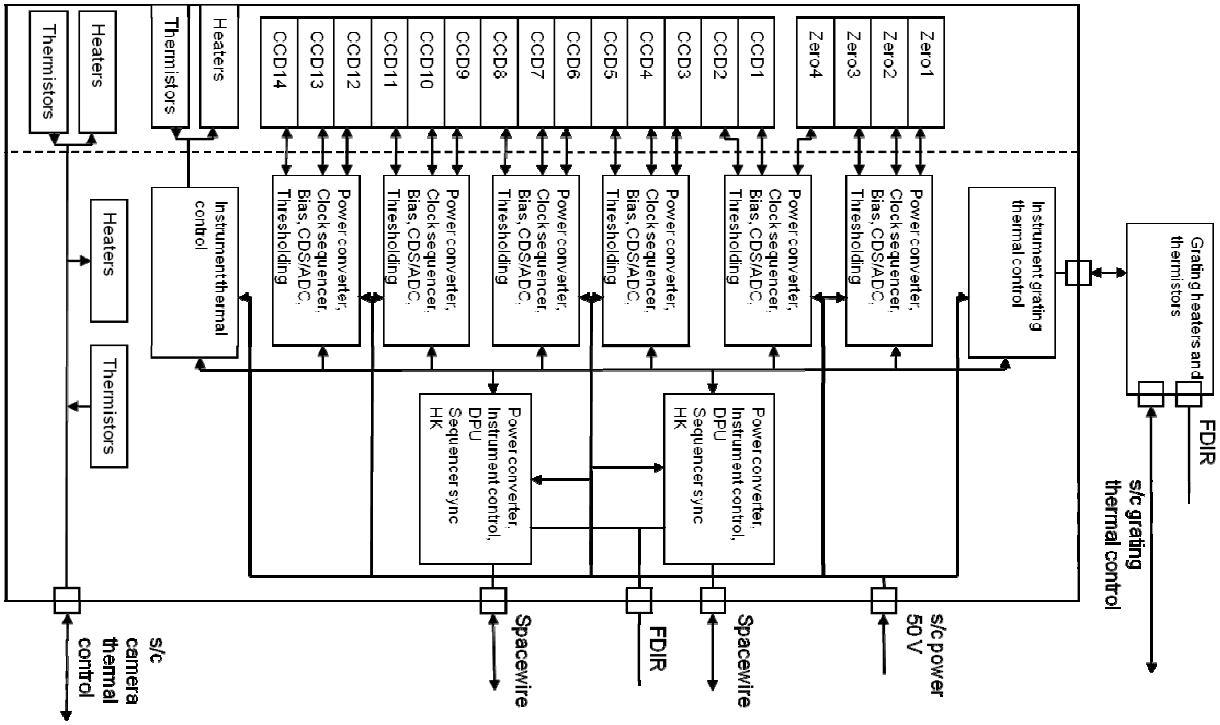

Figure 8: OPXGS camera electrical block diagram.

The interface to the spacecraft's On Board Data Handling bus (OBDH) is via redundant Spacewire connections that configure the clock sequence programs and bias potentials for driving the CCDs. The Instrument Controller also configures the timings for the correlated double sampler (CDS) processors and ADC conversions of the output and passes the digitally processed output (Data Processing Unit) of the camera to the OBDH. The temperature of the CCD bench is programmable via the Instrument Controller and regulated by the Thermal Controller. The CCDs will operate in frame transfer mode, whereby the entire image areas are integrated for a finite time before being rapidly transferred into the store sections for readout via the parallel output nodes (frame rates based on 4 outputs per CCD). The frame integration time will be programmable to ensure enough photon counts in zero order can be obtained, whilst optimized to minimize the integration of stray-light. A maximum frame rate of 16 Hz is possible in this mode with a noise equivalent signal of $\leq 8\ e^-$ rms.

Downloaded from SPIE Digital Library on 09 Aug 2010 to 128.183.56.12. Terms of Use: http://spiedl.org/terms

5. CUSTOM CCD FORMAT

The array comprises eighteen 2-side buttable, frame-transfer, back-illuminated CCDs thinned to 30 µm. The imaging area has 2,200 vertical columns of 15 µm pitch and 440 horizontal rows of 50 µm pitch, created by a 2-phase electrode structure. By default, the device is read out with 1×2 default binning, effectively creating image pixels of 15 µm × 100 µm pixels that adequately oversample the sub-apertured PSF in the dispersion direction, whilst minimising data sampled in the astigmatism direction. After the frame integration period, the charge is rapidly transferred into two shielded store sections comprising 10 µm x 10 µm pixels, where it is then read out through a split serial register. A schematic of the device is shown in Figure 9.

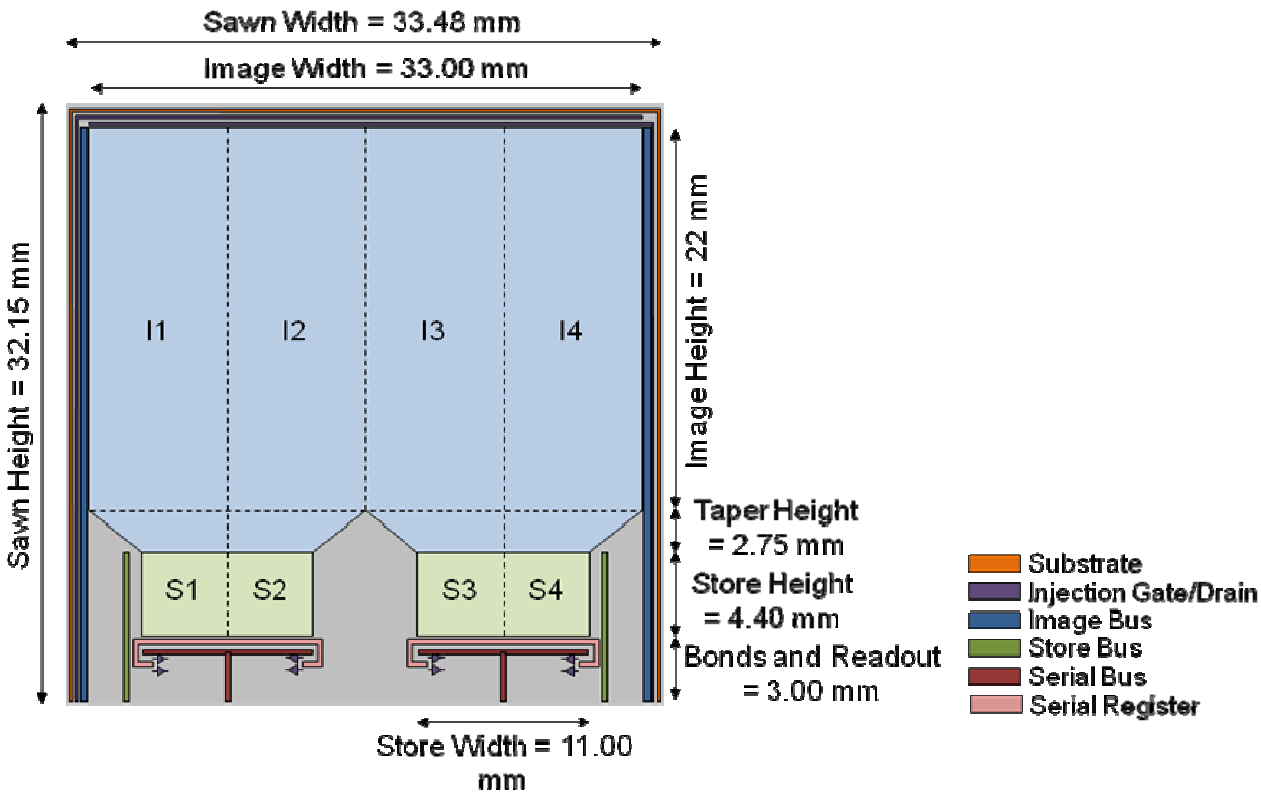

Figure 9: Custom frame-transfer CCD schematic

Each register is terminated by 2-stage output circuits with a node responsivity of ~7 µV/e^- that allows a read noise <8 e^- R.M.S. at pixel rates up to 3 MHz. Dummy amplifiers are included should the readout electronics require them for the high pixel frequencies (2.3 MHz) required for frame rates up to 16 Hz. A parallel charge injection structure is included to mitigate for losses in parallel charge transfer efficiency, caused by in-flight radiation damage over the course of the 10 year mission.

Downloaded from SPIE Digital Library on 09 Aug 2010 to 128.183.56.12. Terms of Use: http://spiedl.org/terms

6. CAMERA ARRAY

In order to maximise the collection of dispersed light it is necessary to reduce the 'dead space' between detectors to the absolute minimum. This is achieved by reducing the feature sizes along the butting edges of the detectors and by overlapping detectors, as shown in Figure 10[3]. Detailed dimensions of the CCD overlaps are shown in Figure 11.

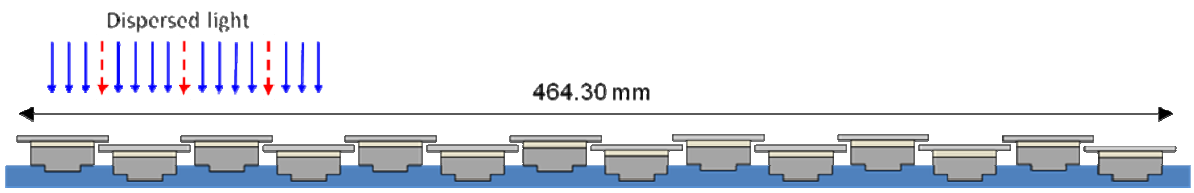

Figure 10: Overlapping CCDs in the array to maximise collection of dispersed spectra.

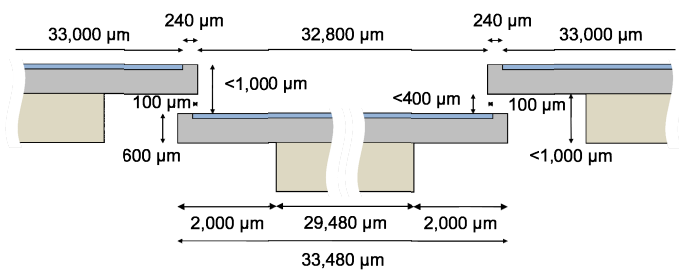

Figure 11: Overlapping CCD dimensions

The dashed arrows in Figure 10 demonstrate the incident photons that are not collected and the effect on the instruments effective area (A_{eff}) is shown by the modeled 16.7% dips in Figure 12.

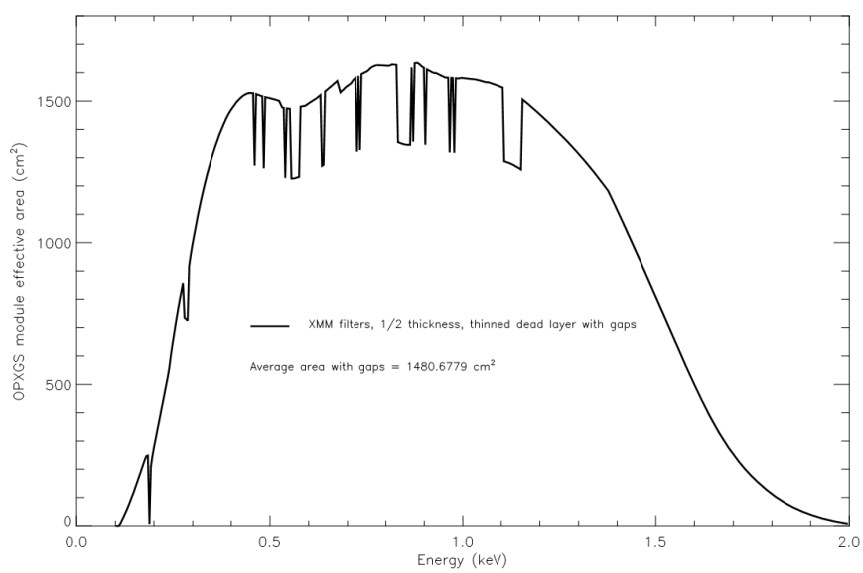

Figure 12: XGS instrument effective area including 'Dead space' losses in effective area due to gaps in the CCD array.

The wider dips in effective area in Figure 12 are observed due to the region of uncollected spectrum under CCD 8, shown in Figure 2, although these do not reduce the effective area to below the mission requirement of 1,000 cm^2.

Downloaded from SPIE Digital Library on 09 Aug 2010 to 128.183.56.12. Terms of Use: http://spiedl.org/terms

7. OPTICAL BLOCKING FILTERS

The optical blocking filters employed on the Reflection Grating Spectrometer (RGS) instrument onboard XMM-Newton had a minimum thickness of 45 nm Al deposited onto a 26 nm MgF_2 buffer[4]. The detectors in the OP-XGS array will be read out at a rate almost 2 orders of magnitude faster and are therefore less susceptible to stray-light than the RGS and can therefore tolerate a thinner filter. The baseline optical blocking filter for the CCDs is therefore 28 nm of Al deposited onto a 13 nm buffer layer of MgF_2. This is highly advantageous to the mission as this increases the quantum efficiency of the detectors at the softer end of the energy spectrum and hence increases the effective area of the instrument as a whole. Figure 13 demonstrates the increase in effective area by reducing the filter thickness.

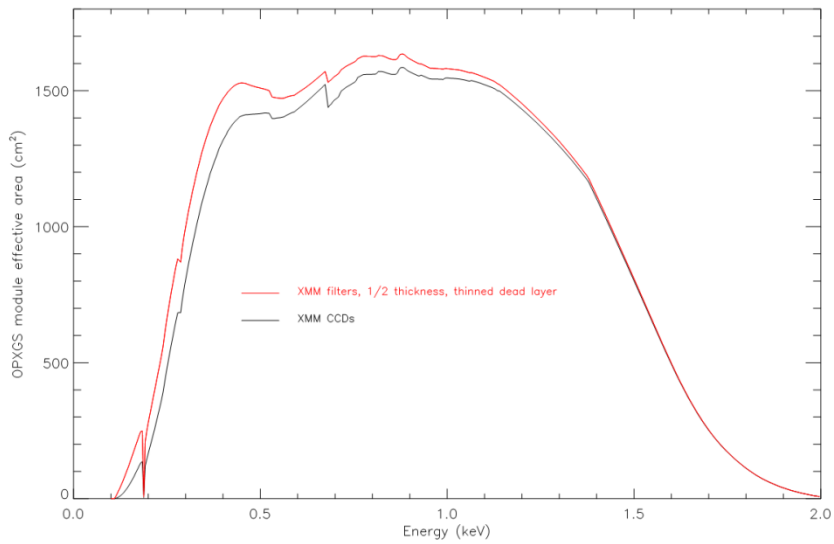

Figure 13: Increases to instrument effective area through reduced optical blocking filter thicknesses

8. MOLECULAR CONTAMINATION

The camera will be launched sealed by a door, shown in Figure 14, which will only be opened post launch and after sufficient time has passed for the spacecraft to have out-gassed significantly and the pressure within the telescope tube to have reduced.

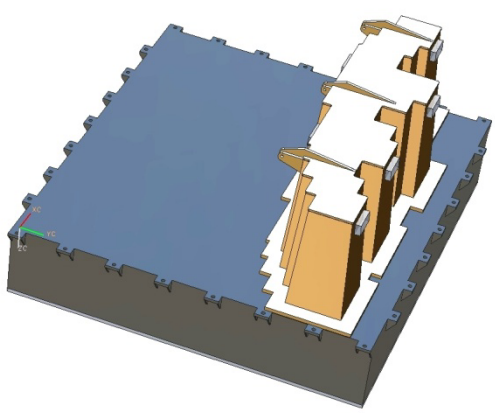

Figure 14: Hermetically sealed door at entrance to stray light baffle to prevent early contamination build up on CCDs

Downloaded from SPIE Digital Library on 09 Aug 2010 to 128.183.56.12. Terms of Use: http://spiedl.org/terms

Molecular build-up on the CCDs has a similar affect as the application of a filter. For the purpose of this study it has been assumed that the contamination is uniform across the surface of the CCD and that all molecular contamination will occur after launch.

Taking the back-illuminated CCDs used on the RGS and the baseline filter as the starting 100% quantum efficiency (QE) value, the effect of applying hydrocarbon contamination and ice to the CCD surface has been investigated. The hydrocarbon effect was studied at 300 eV (the point in the OPXGS bandpass that is closest to the carbon k-shell edge and so the point that will be most affected by the hydrocarbon and ice was studied at the oxygen k-shell edge (523 eV)). Figure 15 shows the effect of different levels of this contamination of the QE relative to the original QE of the device.

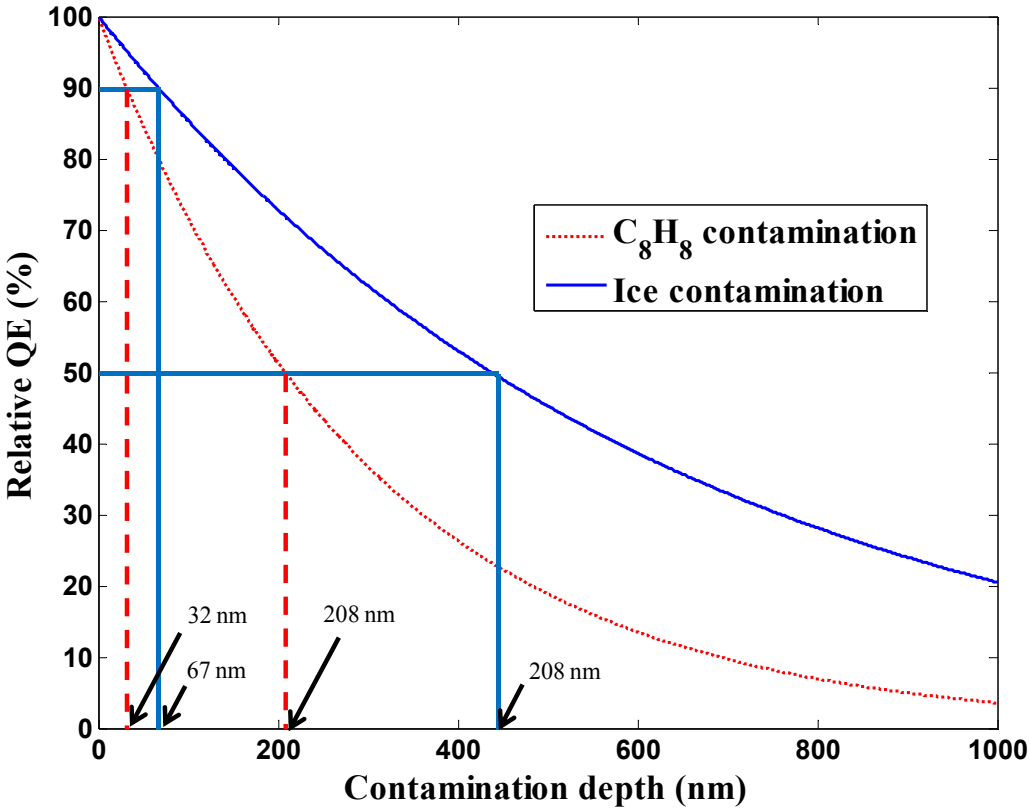

Figure 15: Effect of hydrocarbon and water contamination upon relative QE at 300 eV and 523 eV respectively.

This clearly shows that hydrocarbons have a larger affect on the QE than ice, but it is unclear of the affect across the energy range. If the limit on contamination build-up is defined by the point at which it causes the largest drop in QE then for a 10 % drop in QE the instrument can tolerate 32 nm of hydrocarbons or 67 nm of ice and for a 50 % drop the tolerances are 208 nm and 423 nm respectively.

9. ELECTRON DIVERTOR ANALYSIS

Electrons with energy greater than 20 keV incident on the OPXGS detector array can easily be identified and their effects removed during image processing. However, it is important to prevent electrons with energies less than 20 keV whose effects cannot be easily accounted for from interacting with the CCDs. This is done through magnetic deflectors that redirect incident particles away from the OPXGS focal plane.

Downloaded from SPIE Digital Library on 09 Aug 2010 to 128.183.56.12. Terms of Use: http://spiedl.org/terms

Models of electrodynamics were used to calculate the required field strength that is needed to deflect incident electrons away from the CCD camera array. The analysis first contains a calculation of the electron velocity which is then used to work out the required field strength in order to deflect the electrons within the length of the stray light baffle.

In the analysis the following were assumed: The incident electrons are assumed to be collimated when they arrive at the light baffle entrance and as such any electrons approaching from at an angle from the side are not accounted for. The magnetic field is assumed to perfectly uniform across the stray light baffle. The stray light baffle is assumed to be a simple rectangle without any complex structure. Finally, the radial distance of the electrons path is the same as the length of the stray light baffle which will result in the electrons colliding with the stray light baffle instead of the CCD array.

The required field strength to deflect incident 20 keV electrons was found to be 3 mT. Assuming the Magnetic deflectors are made of 8 mm × 35 mm × 15 mm neodymium magnets, which are capable of producing fields >1 T, then it should be entirely feasible to create the required field strength. Six such magnets are shown attached to external faces of the stray light baffle in Figures 5 & 15. Any particles with lower energies should be deflected more and as such any particle with an energy <20 keV should be prevented from interacting with the CCDs.

10. CONCLUSIONS

A detailed study has been performed on the OPXGS instrument for IXO in the frame of the ESA Assessment phase study. Considerable trade space has been covered in assessing the optimal instrument configuration.

A baseline OPXGS instrument design has been established that meets, with margin, the requirements of the mission as currently specified to provide an effective area with an average over the bandpass of 1,480cm^2, with a resolution of 3,600 (including 20% margin) and a total mass ~75 Kg.

The camera baselines a compact RGS type CCD Array (12 spectral detectors), surrounded by aluminium radiation shielding, that is passively cooled by two radiators. Dispersed light is collected by 14 CCDs from 6 grating modules that offers both spectral redundancy and redundant zero order monitors. Where light from separate orders overlaps within each arc of dispersion only 200 eV order seperation is required.

We present a specification for custom devices that are based on existing and flight-proven features, although further development is required to reduce the thickness of the optical blocking filters.

REFERENCES

1. McEntaffer R.L.M. et al, “Off-plane grating spectrometer for the International X-ray Observatory”, Proc. SPIE, Vol. 7437, 74370H (2009)

2. Blundell S.J. et al, “Concepts in Thermal Physics”, Oxford University Press (2006)

3. Jorden P.R. et al, “Technology of large focal planes of CCDs”, Proc. SPIE, Vol. 5167, 72 (2004)

4. Den Herder J.W. et al, “The Reflection Grating Spectrometer on board XMM-Newton”, A&A Vol. 365, 1 (2001)

Downloaded from SPIE Digital Library on 09 Aug 2010 to 128.183.56.12. Terms of Use: http://spiedl.org/terms